Rectangular Waveguide Analysis using HFSS

Overview

Rectangular waveguides are widely used in microwave and RF systems for efficient transmission of electromagnetic energy at high frequencies. Unlike transmission lines, waveguides support discrete propagation modes and exhibit frequency-dependent behaviour governed by their geometry.

In this project, a rectangular waveguide was designed and simulated using HFSS to analyse mode propagation, cutoff frequency characteristics, and electromagnetic field distribution. The study focuses on understanding dominant and higher-order transverse electric (TE) modes and validating theoretical concepts through simulation.

Theory

A rectangular waveguide supports multiple modes of propagation, primarily categorized as Transverse Electric (TE) and Transverse Magnetic (TM) modes. Among these, the TE_{10} mode is the dominant mode, as it has the lowest cutoff frequency.

The cutoff frequency for TE modes is given by:

$$F_c = 0.5c\sqrt[2]{\left(\frac{m}{a}\right)^2 + \left(\frac{n}{b}\right)^2}$$

where:

- a, b= waveguide dimensions
- m, n= mode indices
- c= speed of light

Key concepts:

- Below cutoff → waves do **not propagate** (evanescent decay)
- Above cutoff → waves propagate with field patterns specific to the mode
- Higher-order modes require higher frequencies

Modes analysed in this project:

- TE_{10} (dominant)
- TE_{20}, TE_{01}, TE_{11} (higher-order modes)

Design Setup

The rectangular waveguide was modelled in HFSS with the following configuration:

- Structure: Hollow rectangular metallic waveguide
- Material: Perfect Electric Conductor (PEC) walls
- Medium: Air-filled interior
- Excitation: Wave ports at both ends
- Frequency sweep: ~5 GHz to 20 GHz

Simulation steps:

- Geometry creation based on standard waveguide dimensions
- Assignment of boundary conditions (PEC walls)
- Wave port excitation for mode generation
- Frequency sweep to capture S-parameters and modal behaviour

Results Visualization

Rectangular Waveguide Design

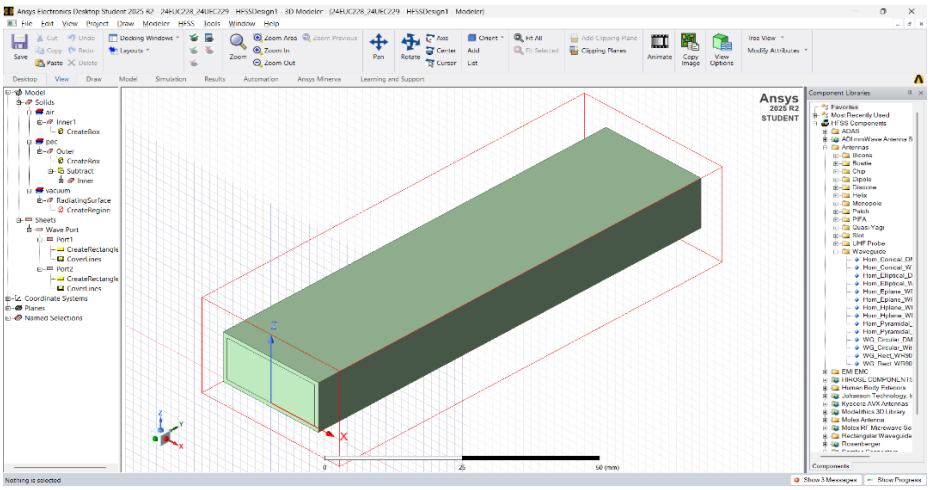

TE_{10} Mode Field Pattern

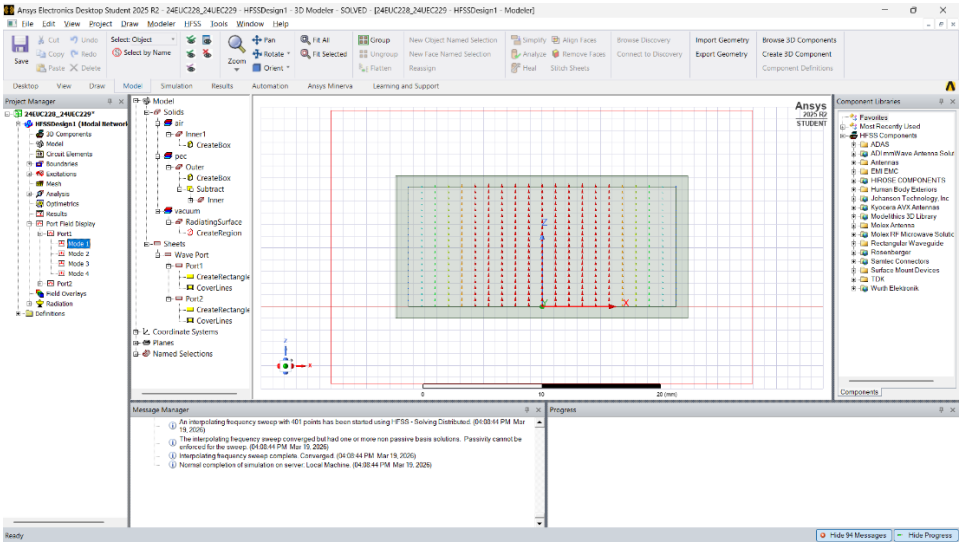

Below Cutoff (Magnitude of E-Field)

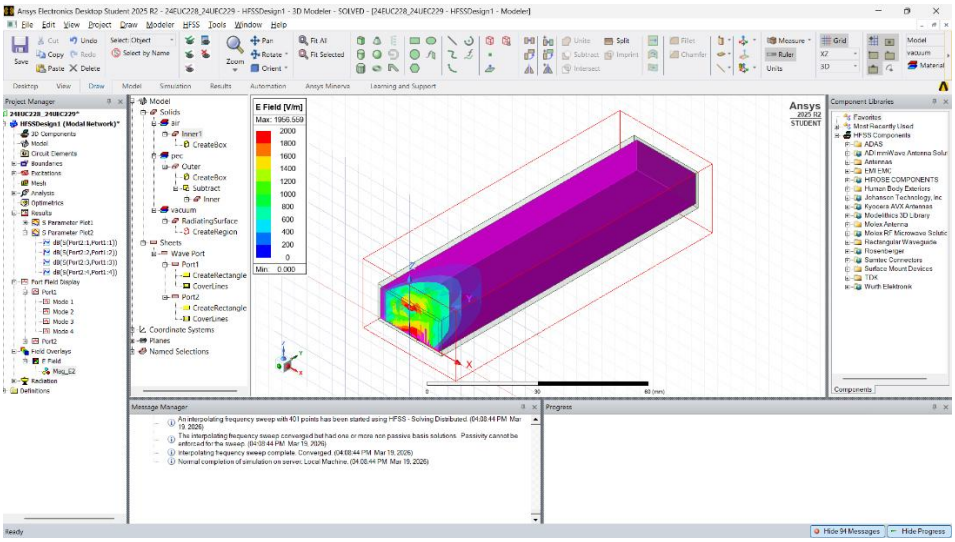

Below Cutoff (E-Field Vector)

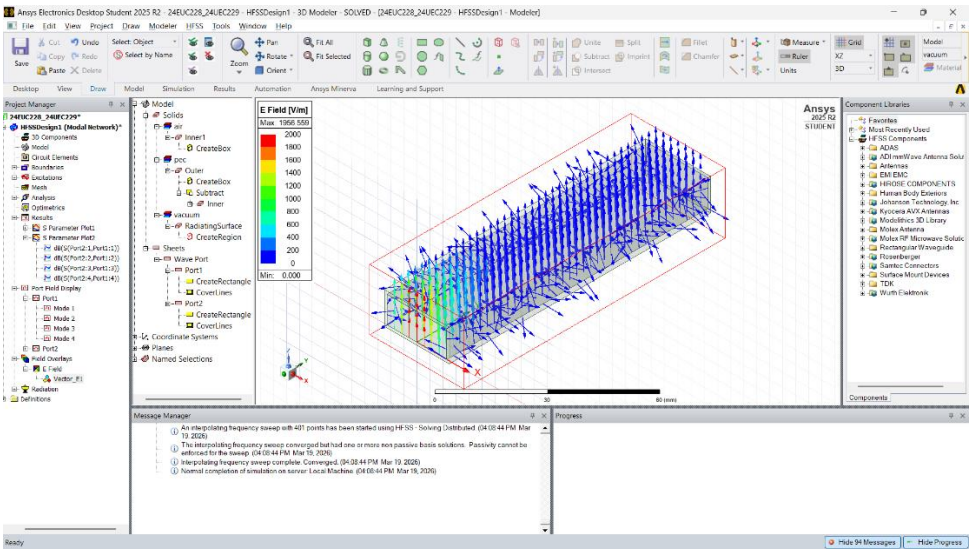

Above Cutoff (Magnitude of E-Field)

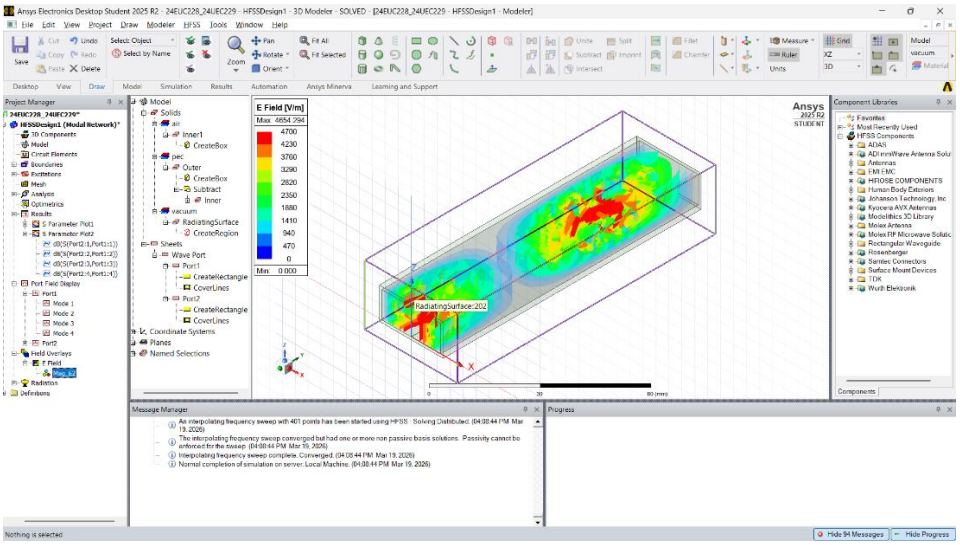

Above Cutoff (E-Field Vector)

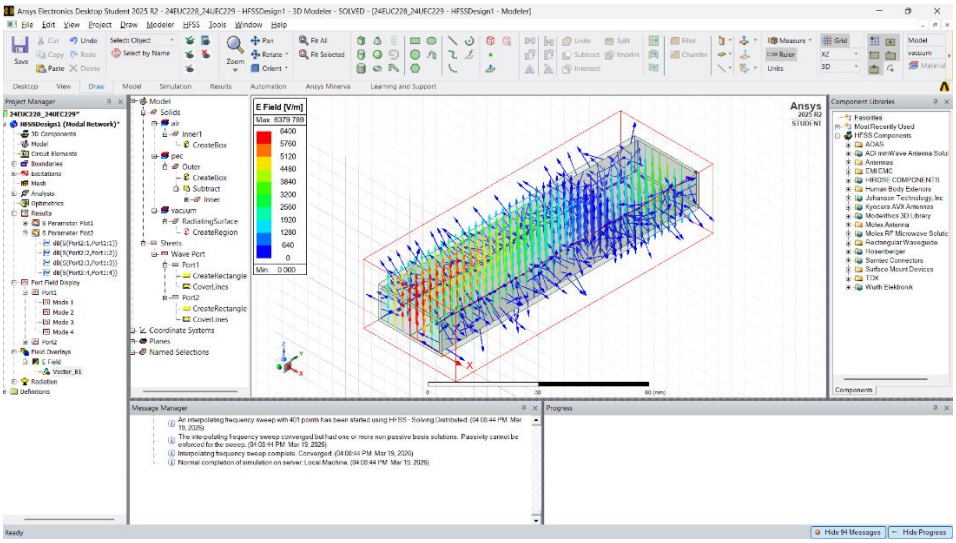

TE_{20} Mode Field Pattern

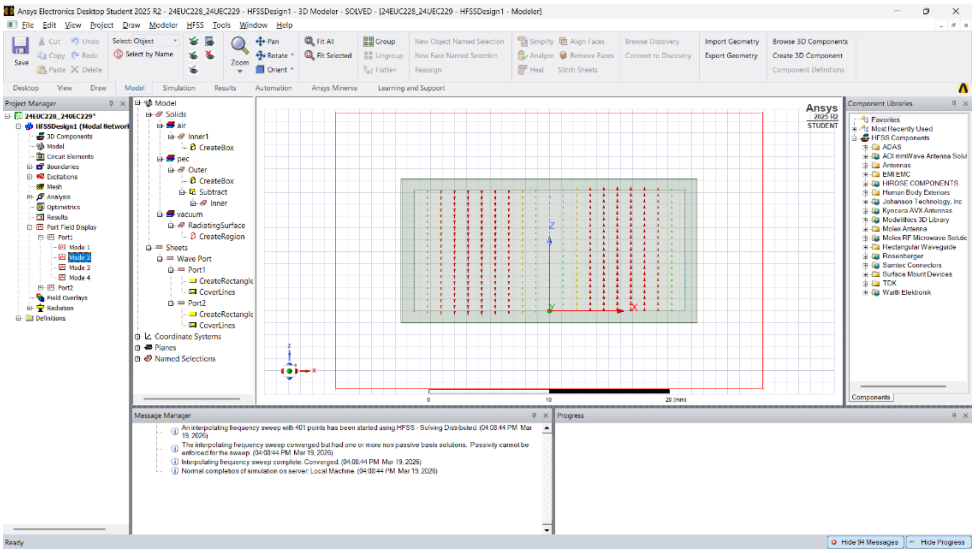

Below Cutoff (Magnitude of E-Field)

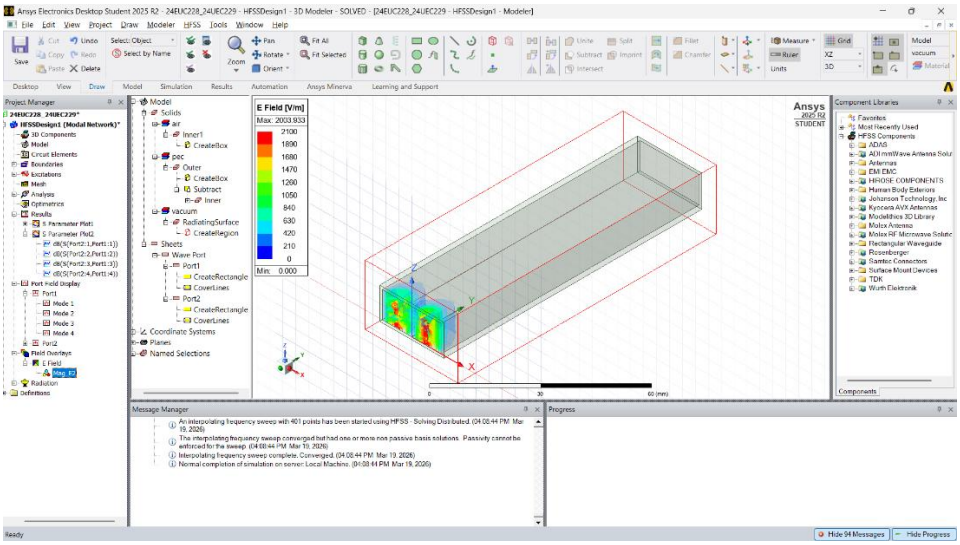

Below Cutoff (E-Field Vector)

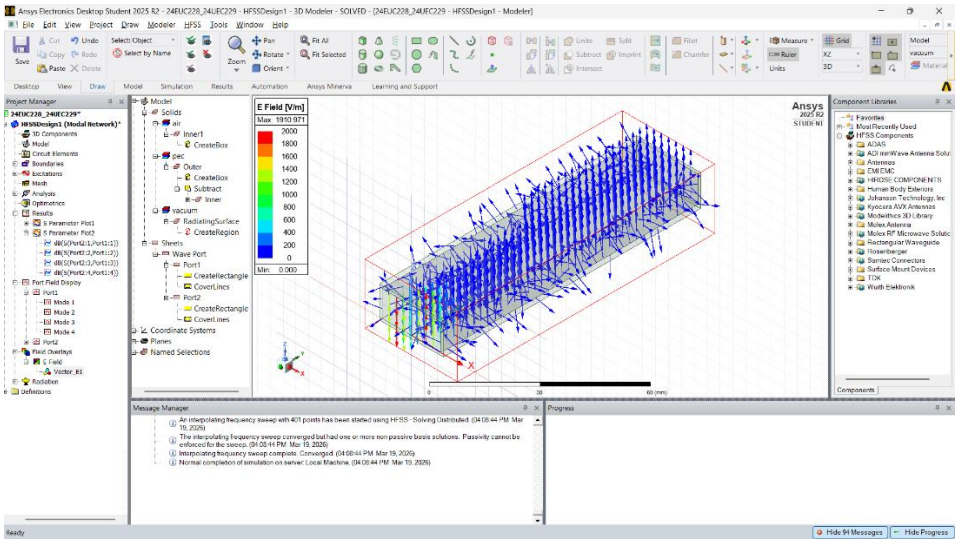

Above Cutoff (Magnitude of E-Field)

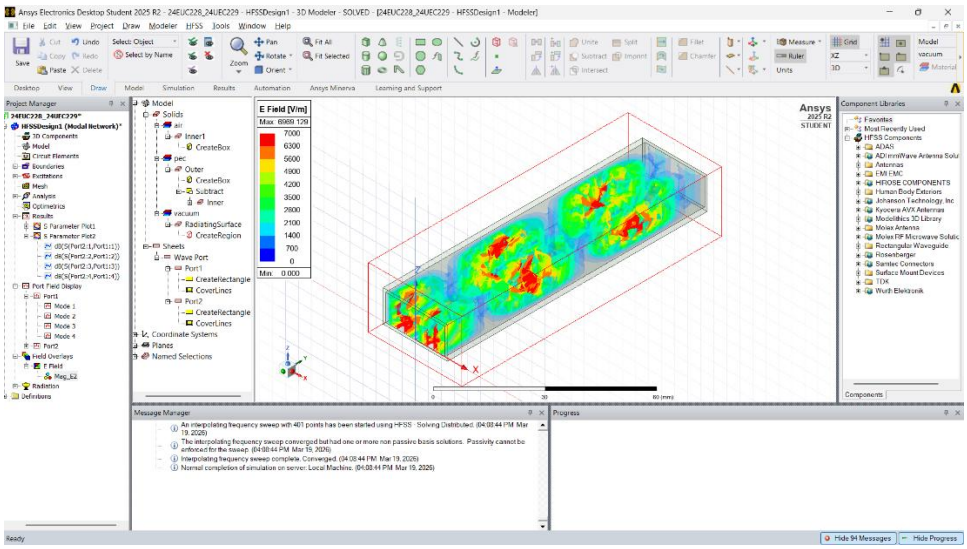

Above Cutoff (E-Field Vector)

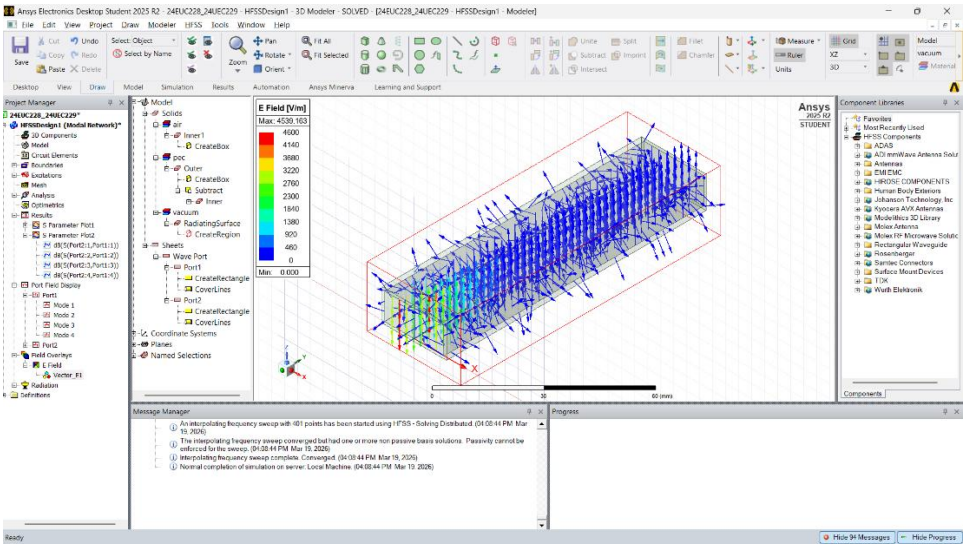

TE$_{01}$ Mode Field Pattern

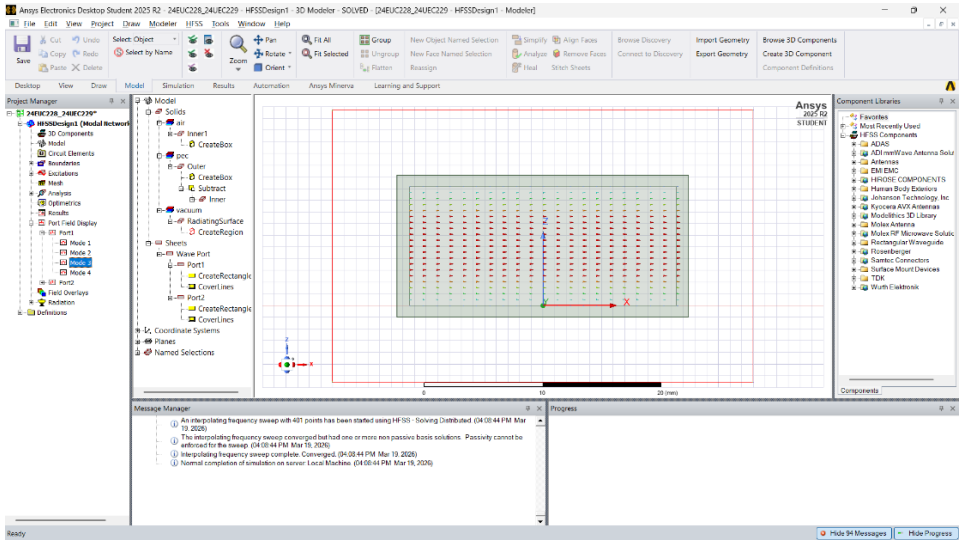

Below Cutoff (Magnitude of E-Field)

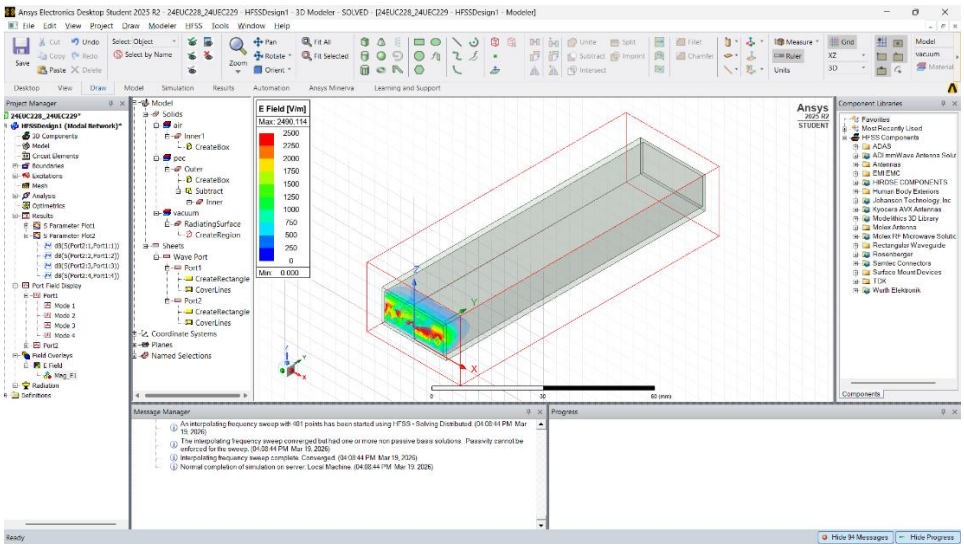

Below Cutoff (E-Field Vector)

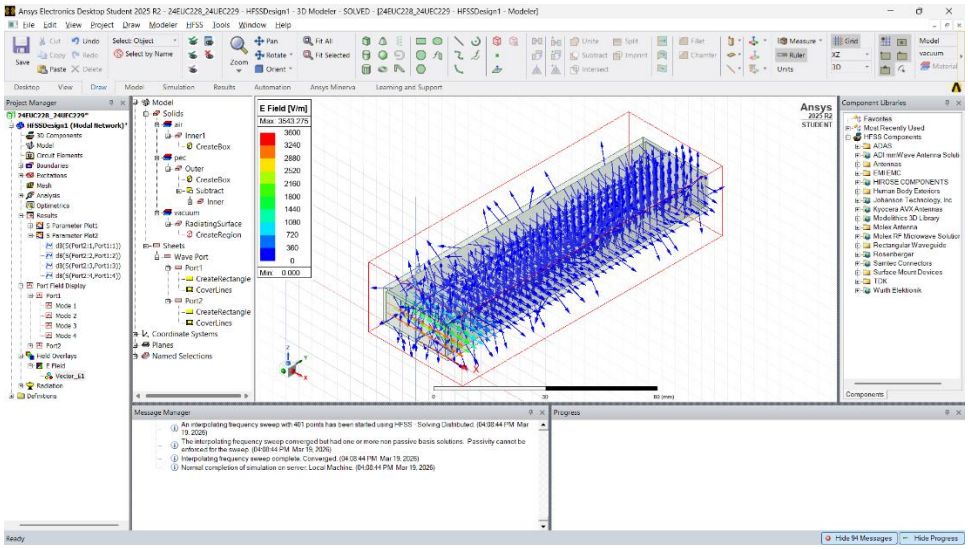

Above Cutoff (Magnitude of E-Field)

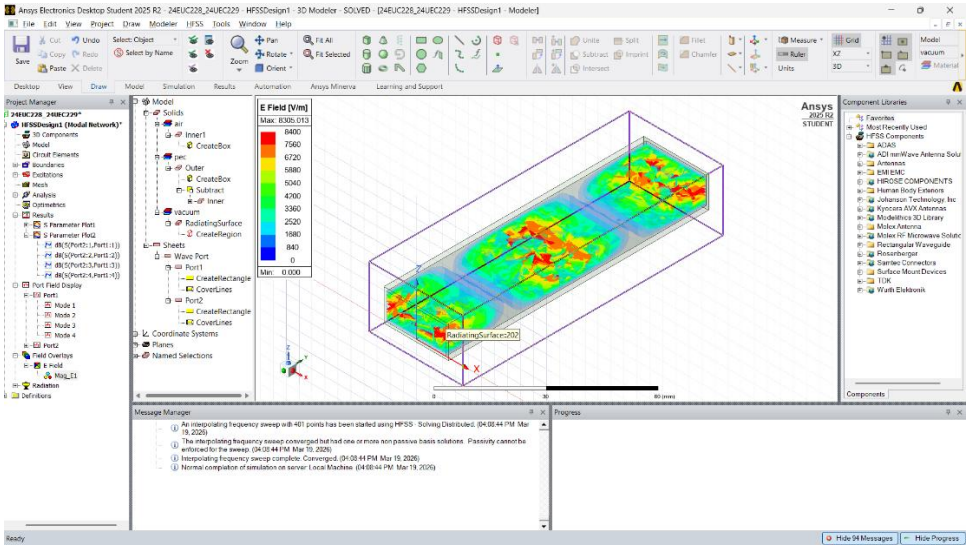

Above Cutoff (E-Field Vector)

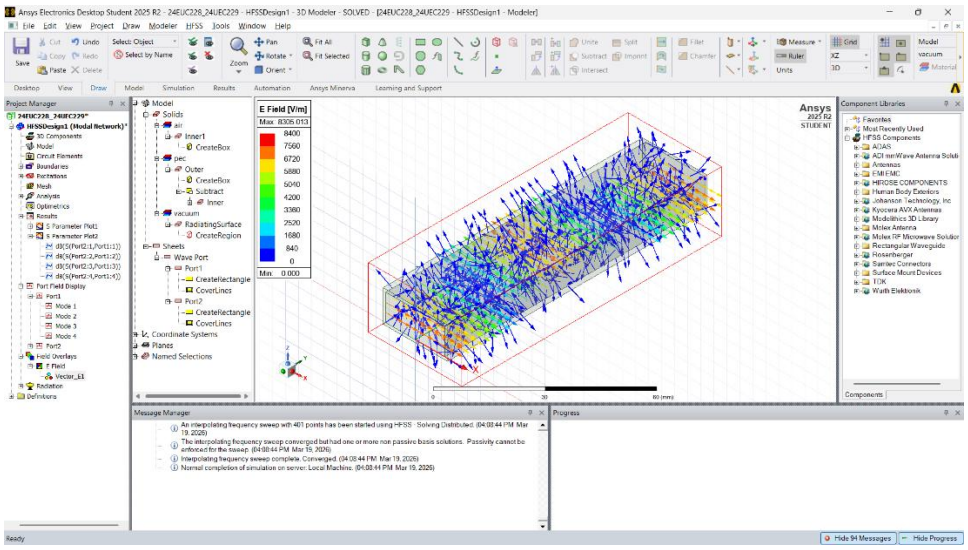

TE_{11} Mode Field Pattern

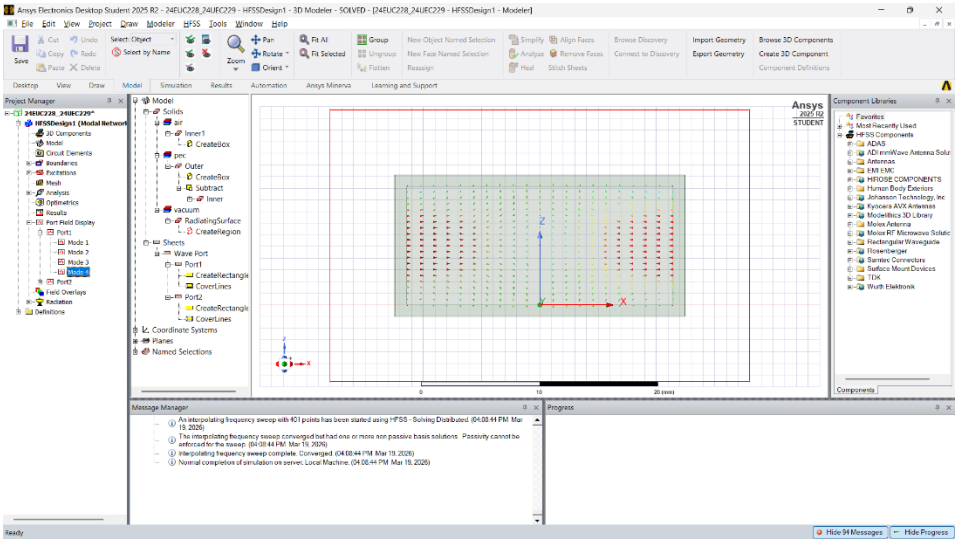

Below Cutoff (Magnitude of E-Field)

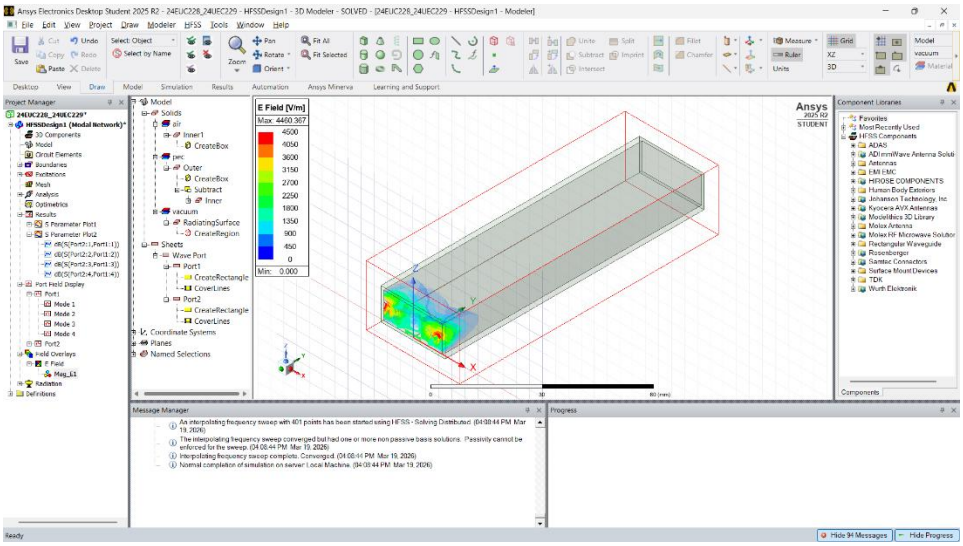

Below Cutoff (E-Field Vector)

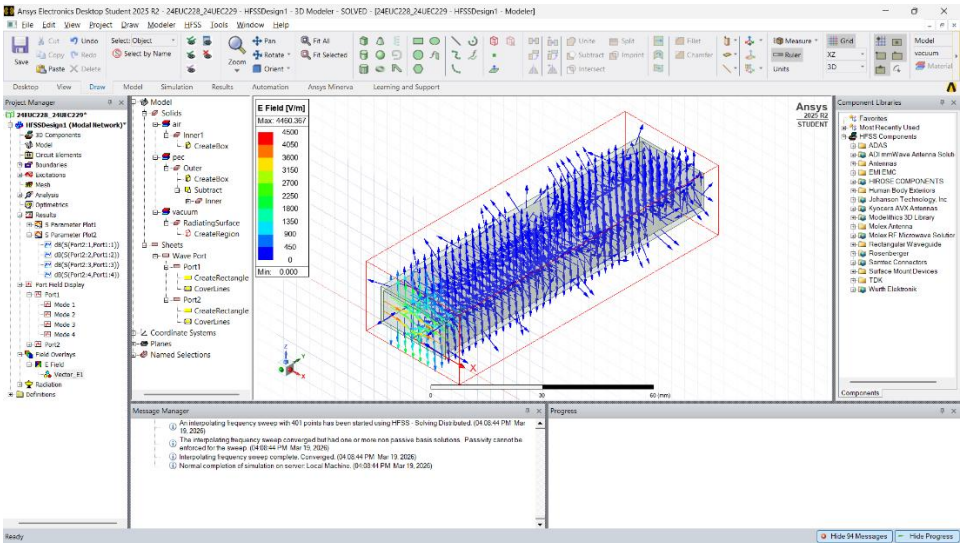

Above Cutoff (Magnitude of E-Field)

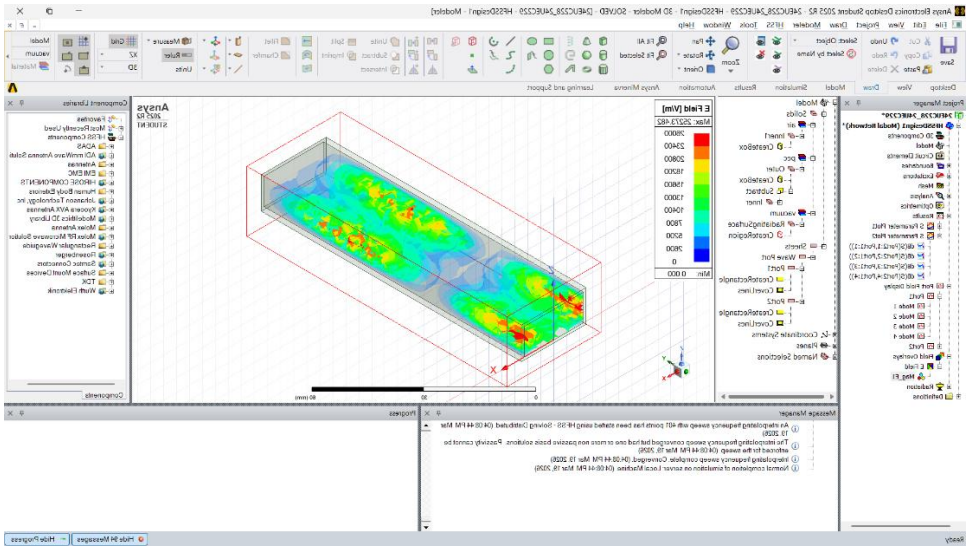

Above Cutoff (E-Field Vector)

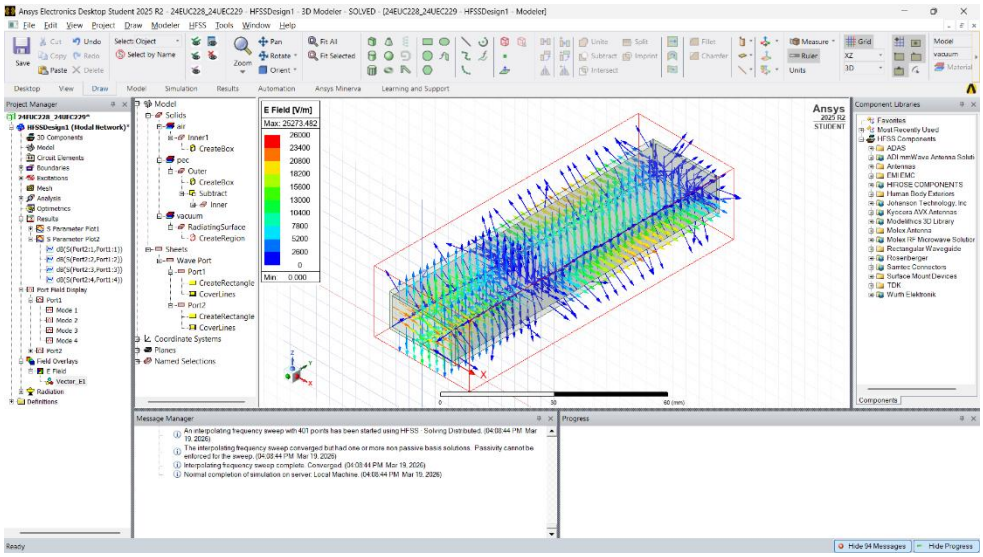

S Parameter Plot for all the Modes

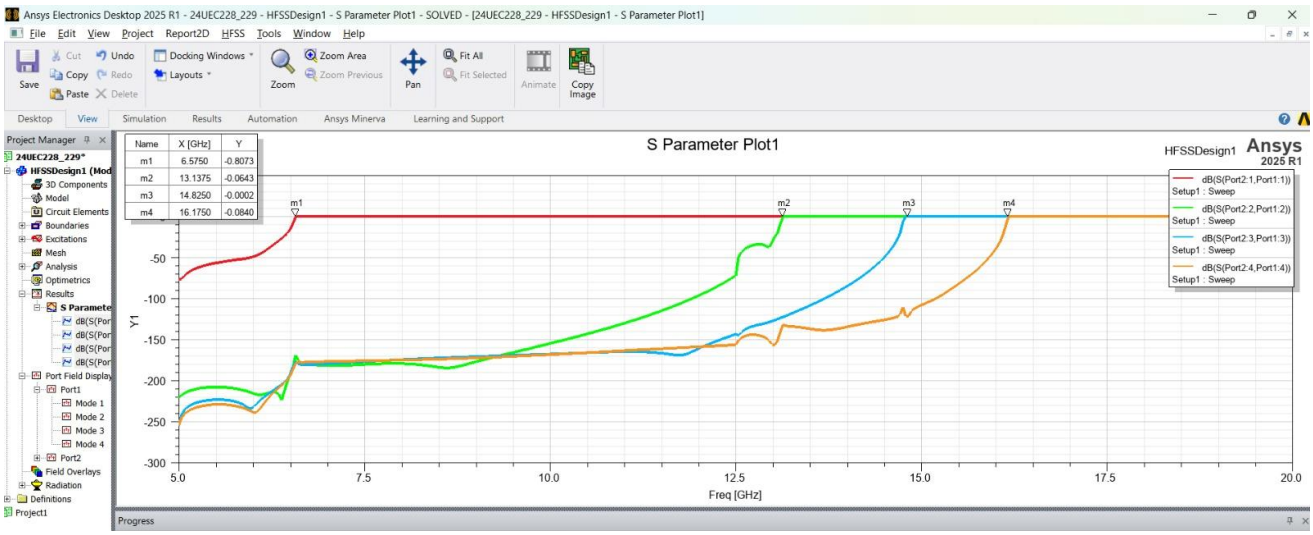

Results

S-Parameter Analysis

- A clear cutoff for the dominant TE_{10} mode was observed around ~6.5 GHz
- Transmission improves significantly above cutoff
- Higher-order modes appear at higher frequencies (~13 GHz and beyond)

Mode Analysis

- TE_{10} mode showed stable propagation with expected field distribution
- Higher modes (TE_{20}, TE_{01}, TE_{11}) exhibited distinct field patterns and required higher excitation frequencies

Field Distribution

- Below cutoff: fields decay rapidly, indicating no propagation
- Above cutoff: stable standing wave patterns consistent with theory
- Field plots confirmed:
    - TE_{10} → single half-wave variation
    - TE_{20} → two variations along width
    - TE_{01} → variation along height

Conclusion

The simulation successfully demonstrated the propagation characteristics of a rectangular waveguide and validated theoretical predictions of cutoff frequency and mode behavior.

Key takeaways:

- TE_{10} is the dominant mode with the lowest cutoff frequency
- Higher-order modes require significantly higher frequencies
- Field distributions obtained from simulation closely match theoretical expectations

This project reinforced the relationship between waveguide geometry, frequency, and electromagnetic behaviour, and provided practical exposure to RF simulation using HFSS.